Project

Type

Date

Product Code

Designer

MADE IN **USA**
Click Here

FIVE HI CZS DL recessed LED downlight

HIGH OUTPUT – HIGH OUTPUT – HIGH OUTPUT – HIGH OUTPUT – HIGH OUTPUT – HIGH OUTPUT – HIGH OUTPUT – HIGH OUTPUT

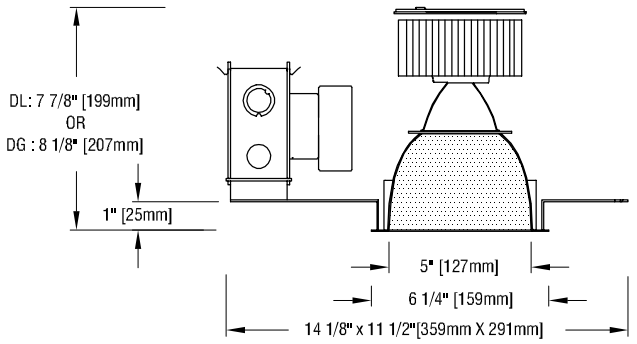

Requires ceiling opening of 5 15/16" (151mm) for Overlap Detail.
Requires ceiling opening of 6 3/16" (157mm) for Flush Trim Detail

FEATURES

- **FIVE HI CZS DL is a 5" aperture LED downlight capable of 31° to 56° beam spreads.** Luminaire is powered by Citizen chip-on-board LED's providing CRI's of 80+, 90+ or 97. See tables below for wattages and efficacies.
- **Luminaire employs an internal 'twist and lock' reflector** to produce an initial beamspread of 31°, 40° or 56°. To allow beamspread to be changed in installed luminaires, internal reflectors are available as accessories.
- **Precise external reflector design minimizes aperture brightness** and provides a shielding angle of 40°. A thin, highly efficient plastic diffuser is included to obscure the LED module from view from below.
- **External reflectors are available in clear natural aluminum finishes** — semi-specular (C), slightly diffuse (V) or fully diffuse (EC) — as well as champagne gold, black Alzak® or white. Other finishes available on special order.
- **An optional integral holder (DG)** permits the use of one or two of a number of **Optical Accessories** including lenses and color filters. A complimentary prismatic lens is included with this option.
- **Housing is constructed from 20-gauge electro-zinc, polyester-coated steel** in Edison Price Lighting's American factory. Heavy-gauge metals and American manufacturing guarantee long-lasting durability.
- **Luminaire includes a pair of mounting bars** (3/4" x 27" C channel). Specialty bars for wood joists and T-bar installations are also available.
- **For more information, click here.**

APPLICATIONS

Luminaire is listed for Damp Location. Fixture is prewired with an insulation detecting thermal protector. Luminaire is approved for eight #12 wire 90° C branch circuit pull through wiring. Removal of the external reflector allows access to the LED module and junction box.

Warranty Detail
Our 5-year warranty does not include the provision of scaffolding, man-lifts, 'cherry pickers' or other extraordinary means of access to a product requiring maintenance.

PRODUCT CODE

For complete product code, list basic unit and select one item from each following box.

Basic Unit
no lens holder; 7 7/8" depth FH-CZS2-DL-5
with lens holder; 8 1/8" depth FH-CZS2-DG-5

Internal Reflector
31° initial beam spread 31D
40° initial beam spread 40D
56° initial beam spread 56D

Driver
dimmble to 1% by a 0-10V dimmer on 120 or 277-volt service ..... - DMV
dimmble to 5% by either an incandescent or ELV dimmer; 120-volt service only ..... - DMP
dimmable to 1% by a 2-wire Lutron compatible dimmer ..... - DMI-LU
dimmable to 1% SoftOn/FadeToBlack by a Lutron EcoSystem control ... - ECO-LU
eldoLED 0-10V (Logarithmic) driver dimmable to 0.1% with a 0-10V dimmer on 120 or 277-volt service ..... - DV0ELG
eldoLED 0-10V (Linear) driver dimmable to 0.1% with a 0-10V dimmer on 120 or 277-volt service ..... - DV0ELN
eldoLED driver dimmable to 0.1%, compatible with DALI control system ..... - DA0-EL
Moon's driver dimmable to 0.1%, compatible with DMX controllers ..... - DX0-MN
Magnitude (Logarithmic) driver dimmable to 0.1% by a Zigbee Wireless Network; wireless range 50' through standard walls ..... -ZG0MAG

Light Source Output (Lumens)

1500L / CRI 97	*2700K & 3000K only*	- L15A
2100L	*2700K & 3000K only*	- L21A
2800L	*2700K & 3000K only*	- L28A
3000L	*2700K & 3000K only*	- L30A
3900L	*2700K & 3000K only*	- L39A
1700L / CRI 90+	*2700K & 3000K only*	- L17H
2300L	*2700K & 3000K only*	- L23H
3100L	*2700K & 3000K only*	- L31H
3400L	*2700K & 3000K only*	- L34H
4400L	*2700K & 3000K only*	- L44H
1900L / CRI 80+		- L19S
2700L		- L27S
3600L		- L36S
4000L		- L40S
5100L		- L51S

Light Color
2700 K ..... - 27K
3000 K ..... - 30K
3500 K ..... *not available in CRI 90+ and CRI 97* ..... - 35K
4000 K ..... *not available in CRI 90+ and CRI 97* ..... - 40K
5000 K ..... *not available in CRI 90+ and CRI 97* ..... - 50K

Voltage 120 volt service ..... - 120 277 volt service ..... - 277

External Reflector Color and Detail

	Overlap	*Trim Flush**
Semi-specular Clear	COL	CTF
Slightly diffuse Clear	VOL	VTF
Fully diffuse Clear	ECOL	ECTF
Champagne Gold	GOL	GTF
Black	BOL	BTF
White	WOL	WTF

Standard reflector flange continues reflector finish. White painted flanges and custom painted flanges are available on special order. Add WF (white flange) or CCF (custom color flange).
Trim Flush reflector trim requires the use of a **plaster ring Accessory (see below).*
▶ Reflectors detailed for metal or wood ceilings available on special order.

OPTIONS *Specify by adding to the basic unit.*

Box Housing construction for fire rated ceilings; 8 ½" depth, 14 1/8" x 11 ½" footprint; see drawing below ..... - FC
Emergency battery pack; not available with Box Housing
Fixture depth increases to 9"; footprint increases to 17 7/8"" x 10" ..... - EM

ACCESSORIES *Specify as separate line item.*

Plaster ring allows use of 5 7/8" OD Trim Flush (-TF) reflector in sheetrock ceiling: 6 3/16" dia hole required ..... - TF RING/5

EXTRA REFLECTORS *Specify as separate line items.*

31° initial beam spread CZS-REF31
40° initial beam spread CZS-REF40
56° initial beam spread CZS-REF56

EDISON PRICE LIGHTING
41-50 22ND STREET, LIC NY 11101 TEL 718.685.0700 FAX 718.786.8530 www.epl.com
©Copyright, Edison Price Lighting 2019

FIVE HI CZS DL

EDISON PRICE LIGHTING

OPTICAL ACCESSORIES *Specify as separate line*

*For use only with the **"lens holder" fixture model**; see Product Code / Basic Unit above. All are 3 ¾" (95mm) diameter. Lenses and filters are glass; screens are aluminum.*

prismatic lens (Solite) PLS/3.75
55° spread lens LENS/3.75
40° x 70° spread lens LENS/3.75-4070
beam smoother DIF05/3.75
33% light reduction screen SCR33/3.75
50% light reduction screen SCR50/3.75

color filters
surprise pink PNK/3.75
daylight blue DAY/3.75
amber AMB/3.75
blue BLU/3.75
green GRN/3.75
red RED/3.75

BOX HOUSING OPTION (FC)

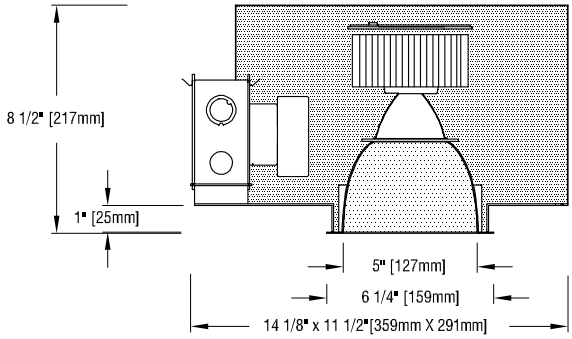

Requires ceiling opening of 5 15/16" (151mm) for Overlap Detail.
Requires ceiling opening of 6 3/16" (157mm) for Flush Trim Detail

PHOTOMETRIC REPORT with 31° reflector (TESTED PER IESNA LM-79-2008)

Leading Testing Laboratories Report No. UT18070007-01a. Original test report furnished upon request.

Luminaire ..... recessed LED round downlight with semi-specular clear aluminum reflector
Lamp ..... Citizen LED, 5100 lumens, 3000K CCT, 80 CRI, with 31° beam spread integral reflector and DIF15 diffuser
Lamp Life ..... rated 50,000 hours based on L70/B50 criteria. LM80 report by LED manufacturer furnished upon request
Spacing Criteria 0.5

CANDLEPOWER DISTRIBUTION *(Candela)*

Vertical Angle	*Horizontal Angle* 0
0	11891
5	10537
15	5901
25	1532
35	111
45	14
55	0
65	0
75	0
85	0
90	0

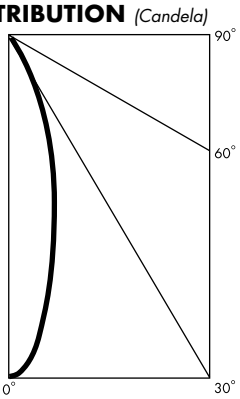

LUMINANCE DATA

Vertical Angle	*Candela/m²*
45	4738
55	0
65	0
75	0
85	0

ZONAL LUMEN SUMMARY

Zone	*Lumens*	*% Fixture*
0 - 40°	3386	99.0
0 - 60°	3399	99.3
0 - 90°	3405	99.5
90 -180°	16	0.5

LUMINAIRE LIGHT OUTPUT AND EFFICACY

(3000K LED, 31° beam spread integral reflector)

LED Light Engine	*Luminaire Light Output*	*Luminaire Efficacy (lms/watt)*	*System Wattage*	*EM Light Output (90 min. run)*
1500 Lumens 97 CRI (L15A)	992*	62*	16	376*
2100 Lumens 97 CRI (L21A)	1369*	65*	21	376*
2800 Lumens 97 CRI (L28A)	1848*	64*	30	376*
3000 Lumens 97 CRI (L30A)	2053*	62*	34	376*
3900 Lumens 97 CRI (L39A)	2635*	55*	48	376*
1700 Lumens 90 CRI (L17H)	1129*	71*	16	411*
2300 Lumens 90 CRI (L23H)	1540*	73*	21	411*
3100 Lumens 90 CRI (L31H)	2053*	68*	30	411*
3400 Lumens 90CRI (L34H)	2293*	67*	34	411*
4400 Lumens 90 CRI (L44H)	2943*	61*	48	411*
1900 Lumens 80 CRI (L19S)	1300*	81*	16	479*
2700 Lumens 80 CRI (L27S)	1814*	86*	21	479*
3600 Lumens 80 CRI (L36S)	2430*	81*	30	479*
4000 Lumens 80 CRI (L40S)	2669*	79*	34	479*
5100 Lumens 80 CRI (L51S)	3422	71	48	479*

**estimated values*

FIVE HI CZS DL

PHOTOMETRIC REPORT with 40° reflector (tested per IESNA LM-79-2008)

Leading Testing Laboratories Report No. UT18070007-02a. Original test report furnished upon request.

Luminaire ..... recessed LED round downlight with semi-specular clear aluminum reflector
Light Source ..... Citizen LED, 5100 lumens, 3000K CCT, 80 CRI, with 40° beam spread integral reflector and DIF30 diffuser
Lamp Life ..... rated 50,000 hours based on L70/B50 criteria. LM80 report by LED manufacturer furnished upon request
Spacing Criteria 0.72

CANDLEPOWER DISTRIBUTION *(Candela)*

Vertical Angle	Horizontal Angle 0
0	6242
5	5986
15	4342
25	2462
35	343
45	20
55	1
65	0
75	0
85	0
90	0

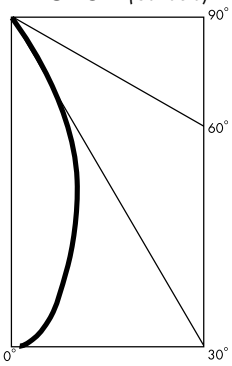

LUMINANCE DATA

Vertical Angle	Candela/m²
45	6769
55	417
65	0
75	0
85	0

ZONAL LUMEN SUMMARY

Zone	Lumens	% Fixture
0 - 40°	3125	98.1
0 - 60°	3147	98.8
0 - 90°	3150	98.9
90 -180°	36	1.1

LUMINAIRE LIGHT OUTPUT AND EFFICACY

(3000K LED, 40° beam spread integral reflector)

LED Light Engine	Luminaire Light Output	Luminaire Efficacy (lms/watt)	System Wattage	EM Light Output (90 min. run)
1500 Lumens 97 CRI (L15A)	924*	58*	16	350*
2100 Lumens 97 CRI (L21A)	1274*	61*	21	350*
2800 Lumens 97 CRI (L28A)	1720*	57*	30	350*
3000 Lumens 97 CRI (L30A)	1912*	56*	34	350*
3900 Lumens 97 CRI (L39A)	2453*	51*	48	350*
1700 Lumens 90 CRI (L17H)	1051*	66*	16	382*
2300 Lumens 90 CRI (L23H)	1434*	68*	21	382*
3100 Lumens 90 CRI (L31H)	1912*	64*	30	382*
3400 Lumens 90CRI (L34H)	2135*	63*	34	382*
4400 Lumens 90 CRI (L44H)	2740*	57*	48	382*
1900 Lumens 80 CRI (L19S)	1211*	76*	16	446*
2700 Lumens 80 CRI (L27S)	1689*	80*	21	446*
3600 Lumens 80 CRI (L36S)	2262*	75*	30	446*
4000 Lumens 80 CRI (L40S)	2485*	73*	34	446*
5100 Lumens 80 CRI (L51S)	3186	67	48	446*

*estimated values

PHOTOMETRIC REPORT with 56° reflector (tested per IESNA LM-79-2008)

Leading Testing Laboratories Report No. UT18070007-03a. Original test report furnished upon request.

Luminaire ..... recessed LED round downlight with semi-specular clear aluminum reflector
Light Source ..... Citizen LED, 5100 lumens, 3000K CCT, 80 CRI, with 56° beam spread integral reflector and DIF80 diffuser
Lamp Life ..... rated 50,000 hours based on L70/B50 criteria. LM80 report by LED manufacturer furnished upon request
Spacing Criteria 0.84

CANDLEPOWER DISTRIBUTION *(Candela)*

Vertical Angle	Horizontal Angle 0
0	3415
5	3347
15	2705
25	1980
35	972
45	125
55	3
65	1
75	0
85	0
90	0

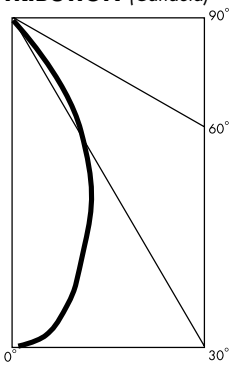

LUMINANCE DATA

Vertical Angle	Candela/m²
45	42303
55	1252
65	566
75	4623
85	2746

ZONAL LUMEN SUMMARY

Zone	Lumens	% Fixture
0 - 40°	2580	94.4
0 - 60°	2718	99.5
0 - 90°	2728	99.8
90 -180°	4	0.2

LUMINAIRE LIGHT OUTPUT AND EFFICACY

(3000K LED, 56° beam spread integral reflector)

LED Light Engine	Luminaire Light Output	Luminaire Efficacy (lms/watt)	System Wattage	EM Light Output (90 min. run)
1500 Lumens 97 CRI (L15A)	792*	50*	16	301*
2100 Lumens 97 CRI (L21A)	1093*	52*	21	301*
2800 Lumens 97 CRI (L28A)	1475*	49*	30	301*
3000 Lumens 97 CRI (L30A)	1639*	48*	34	301*
3900 Lumens 97 CRI (L39A)	2104*	44*	48	301*
1700 Lumens 90 CRI (L17H)	902*	56*	16	328*
2300 Lumens 90 CRI (L23H)	1229*	59*	21	328*
3100 Lumens 90 CRI (L31H)	1639*	55*	30	328*
3400 Lumens 90CRI (L34H)	1830*	54*	34	328*
4400 Lumens 90 CRI (L44H)	2350*	49*	48	328*
1900 Lumens 80 CRI (L19S)	1038*	65*	16	382*
2700 Lumens 80 CRI (L27S)	1448*	69*	21	382*
3600 Lumens 80 CRI (L36S)	1940*	65*	30	382*
4000 Lumens 80 CRI (L40S)	2131*	63*	34	382*
5100 Lumens 80 CRI (L51S)	2732	57	48	382*

*estimated values

FIVE HI CZS DL

EDISON PRICE LIGHTING

LIGHT OUTPUT MULTIPLIER *(based on 5100 lumens, 3000K LED)*

LED Light Engine	*Light Output Multiplier*	*REM Light Output Multiplier (90-minute run)*
1500 Lumens 97 CRI (L15A)	0.29*	0.11*
2100 Lumens 97 CRI (L21A)	0.4*	0.11*
2800 Lumens 97 CRI (L28A)	0.54*	0.11*
3000 Lumens 97 CRI (L30A)	0.6*	0.11*
3900 Lumens 97 CRI (L39A)	0.77*	0.11*
1700 Lumens 90 CRI (L17H)	0.33*	0.12*
2300 Lumens 90 CRI (L23H)	0.45*	0.12*
3100 Lumens 90 CRI (L31H)	0.6*	0.12*
3400 Lumens 90CRI (L34H)	0.67*	0.12*
4400 Lumens 90 CRI (L44H)	0.86*	0.12*
1900 Lumens 80 CRI (L19S)	0.38*	0.14*
2700 Lumens 80 CRI (L27S)	0.53*	0.14*
3600 Lumens 80 CRI (L36S)	0.71*	0.14*
4000 Lumens 80 CRI (L40S)	0.78*	0.14*
5100 Lumens 80 CRI (L51S)	1	0.14*

**estimated values*

STANDARD (0-10V DIMMING) DRIVER INFORMATION

UL Class 2, dry and damp location

Voltage	*120*	*277*
Input Watts (L15A/L21A/L28A/L30A/L39A/ *L17H/L23H/L31H/L34H/L44H/ L19S/L27S/L36S/L40S/L51S lumens)*	16/21/30/34/48	16/21/30/34/48
Input Current (A) (L15A/L21A/L28A/L30A/L39A/ *L17H/L23H/L31H/L34H/L44H/ L19S/L27S/L36S/L40S/L51S lumens)*	.13/.18/.25/.28/.40	.06/.08/.11/.12/.17
Output Current (mA)	350–1100	350–1100
Min. Power Factor	>0.9	>0.9
Operating Temperature Range (F)	–4 to 122	–4 to 122

Semi-specular clear (C)	1
Slightly diffuse clear (V)	.95
Fully diffuse clear (EC)	.88
Champagne gold clear (G)	.95
Black (B)	.49

LED CCT MULTIPLIERS

2700K	.96
3000K	1
3500K	1.02
4000K	1.03